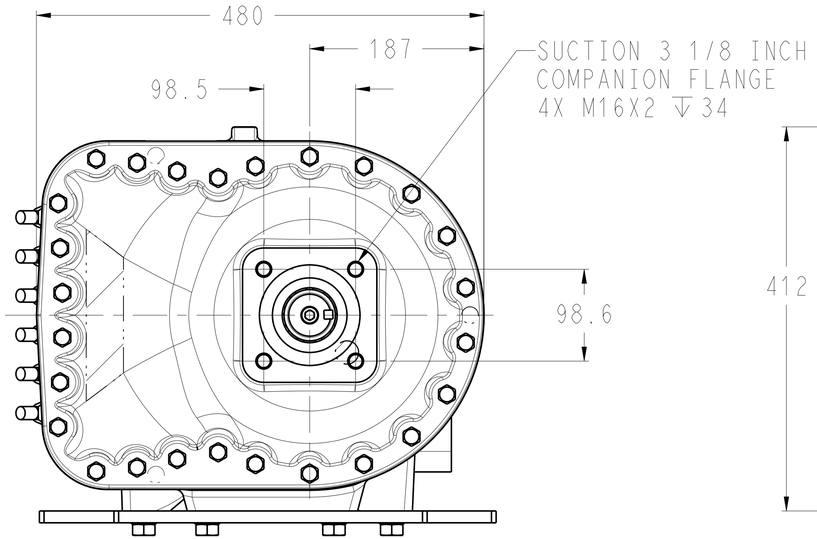

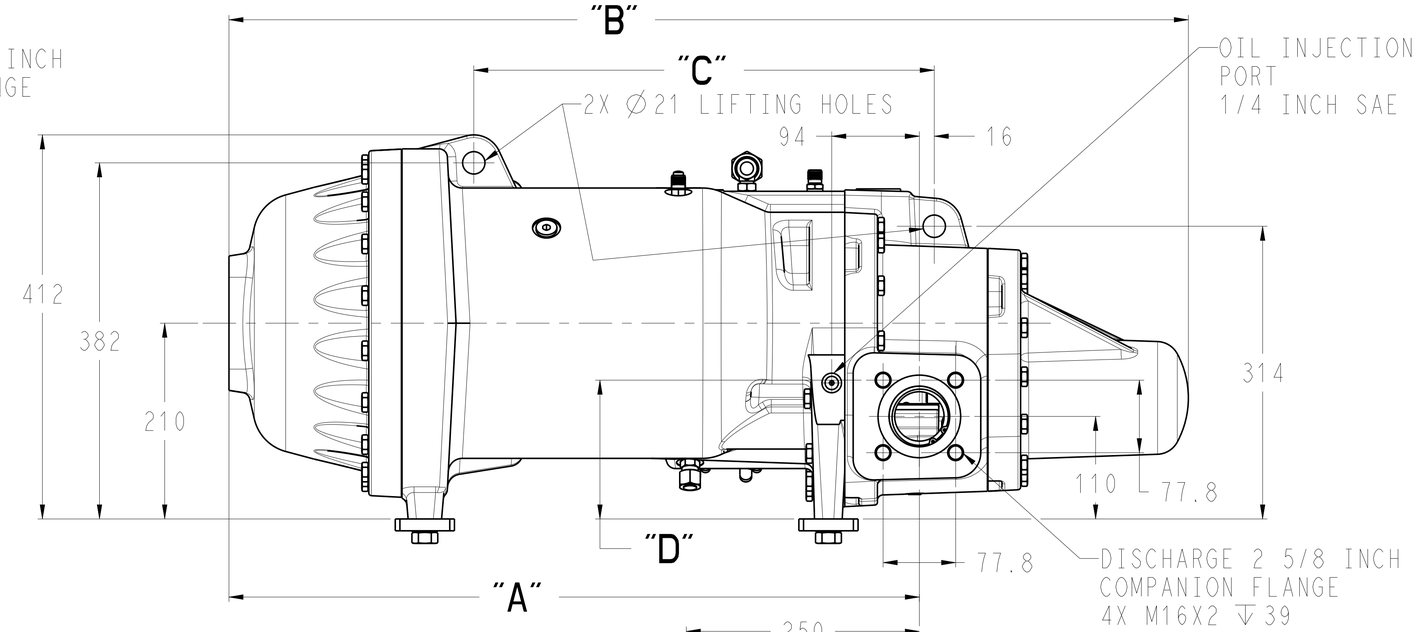

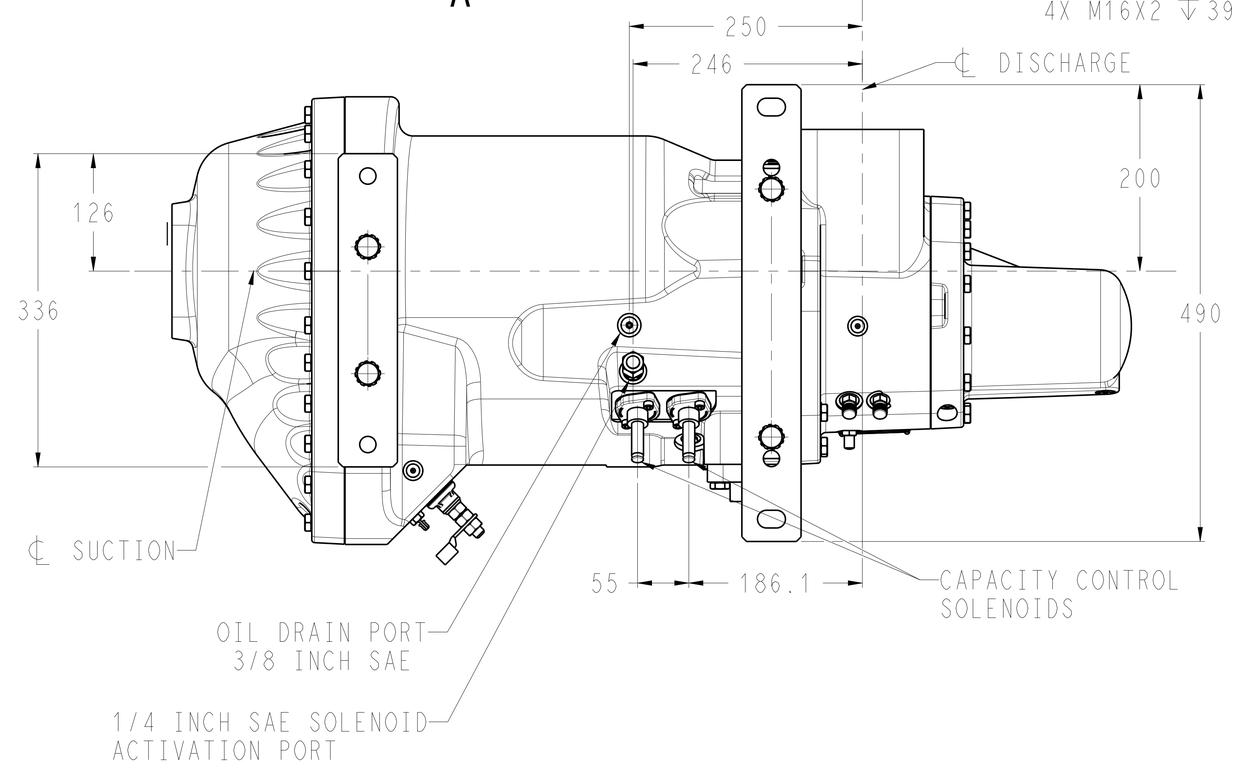

MODEL NUMBER	"A"	"B"	"C"	"D"	WEIGHT (Kg)
06TS*137---D	741	1029	494	145.9	324.5
06TS*155---D	759	1047	512	148.3	331
06TS*186---D	803	1092	556.5	157.6	348